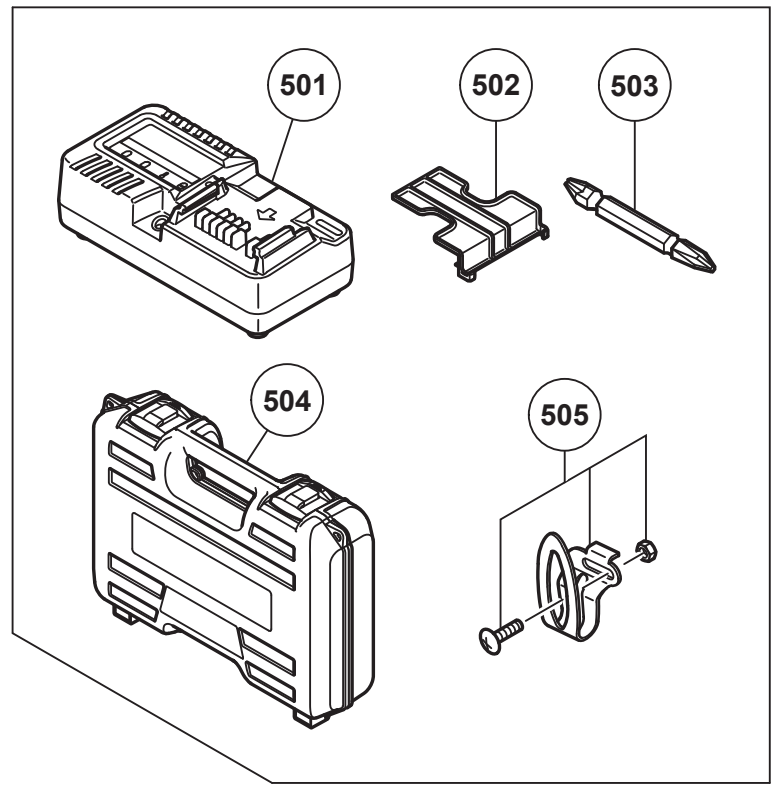

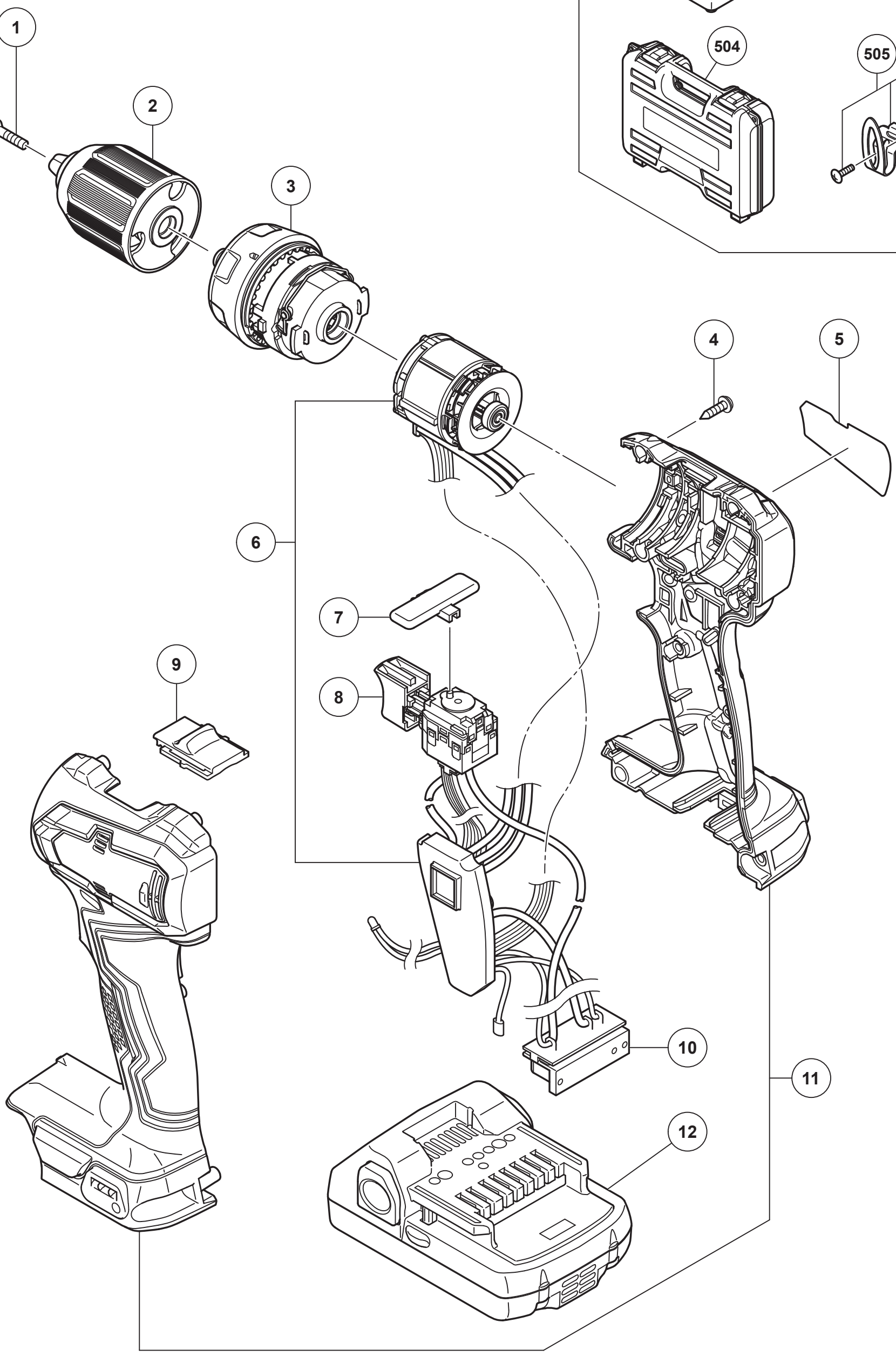

MODEL
DS18DDX

Rev.1

HiKOKI

CORDLESS DRIVER DRILL DS18DDX

Item No.	Code No.	Description	No. Used	Remarks
1	337426	LEFT-HAND HEXALOBULAR M5	1	
2	376359M	DRILL CHUCK 13TLRA-N	1	
3	374383	GEAR BOX (A)	1	
4	313687	TAPPING SCREW (W/FLANGE) D3X16 (BLACK)	8	
5	376363M	NAME PLATE	1	
6	376360	WIRING ASS'Y	1	
7	374399	PUSHING BUTTON	1	
8	376362	DC-SPEED CONTROL SWITCH	1	
9	374382	SHIFT KNOB	1	
10	376361	BATTERY TERMINAL	1	
11	376357M	HOUSING (A).(B) SET	1	
12	333353M	BATTERY BSL 1815 (USA,CAN)	2	INCLUD.502
		STANDARD ACCESSORIES		
501		CHARGER (MODEL UC18YKSL)	1	
502	329897	BATTERY COVER	1	
503	983006	+ DRIVER BIT NO.2 65L	1	
504	336642	CASE	1	
505	376358	HOOK SET	1	

* ALTERNATIVE PARTS